A-5™ STEALTH CR-15™ Parts List

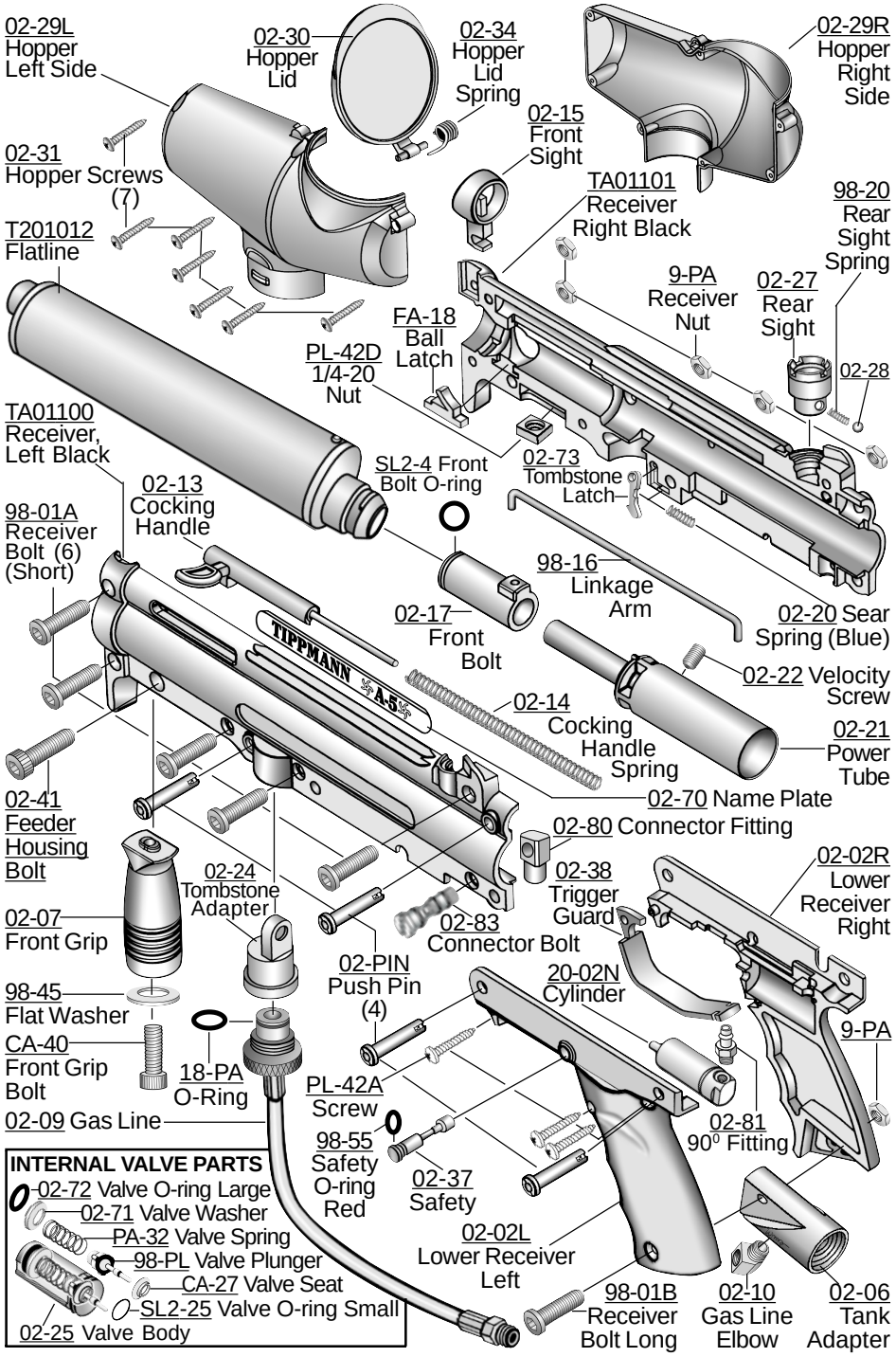

WARNING

DO NOT FIELD STRIP OR OTHERWISE DISASSEMBLE THIS MARKER WHILE IT IS PRESSURIZED WITH AIR.

TIPPMANN™
1-800-533-4831
www.tippmann.com

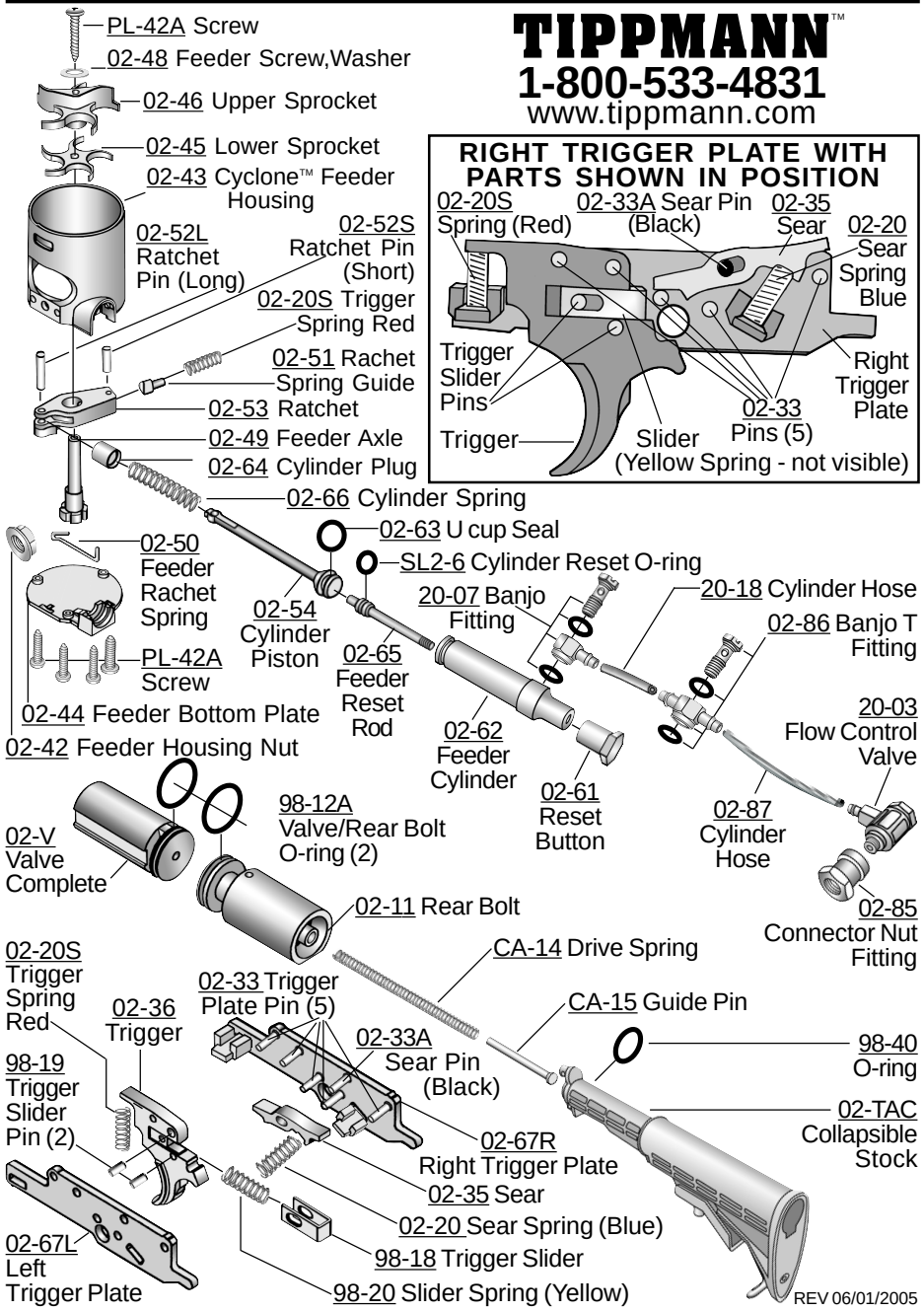

REV 06/01/2005